KV-20TX10
RM-756

SERVICE MANUAL

US Model
Chassis No. SCC-B55D-A

Canadian Model
Chassis No. SCC-A50K-A

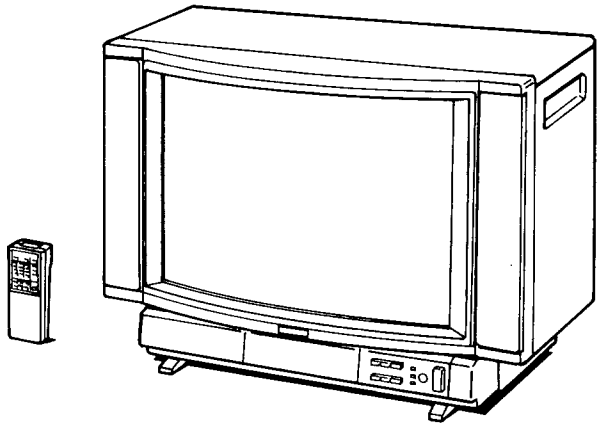

P3A CHASSIS

Note: The service manual for RM-756 has been issued separately.

MODELS OF THE SAME SERIES	
KV-20TX10	
KV-20TR10	
KV-20TS10	

SPECIFICATIONS

Television system	American TV standards
Channel coverage	VHF: 2–13 UHF: 14–69 Cable TV: 1–125
Picture tube	Microblack Trinitron tube **20-inch picture measured diagonally** 21-inch picture tube measured diagonally
Input	VIDEO INPUT (phono jacks) Video: 1 Vp-p, 75-ohms unbalanced, sync negative Audio: 500 mVrms (100% modulation) Impedance: 47 kilohms
Output	AUDIO OUTPUT (VARIABLE) (phono jacks) More than 408 mVrms at the maximum volume setting (variable) (100% modulation) Impedance: 10 kilohms
Power requirements	120 V AC, 60 Hz
Power consumption	130W (max.) 5W (in standby condition)
Accessories supplied	Remote Commander RM-756 with 2 size AA batteries Telescopic dipole antenna Antenna connector (300 ohms to 75 ohms matching trasformer)
Optional accessories	U/V mixer EAC-66 Connecting cords VMC-810S (1m) VMC-820S (2m) RK-C74 (1.5m) RK-C150 (3m)

Design and specifications subject to change without notice.

MICROFILM

TRINITRON® COLOR TV

SONY®

SECTION 1
GENERAL

1-1. LOCATION OF CONTROLS

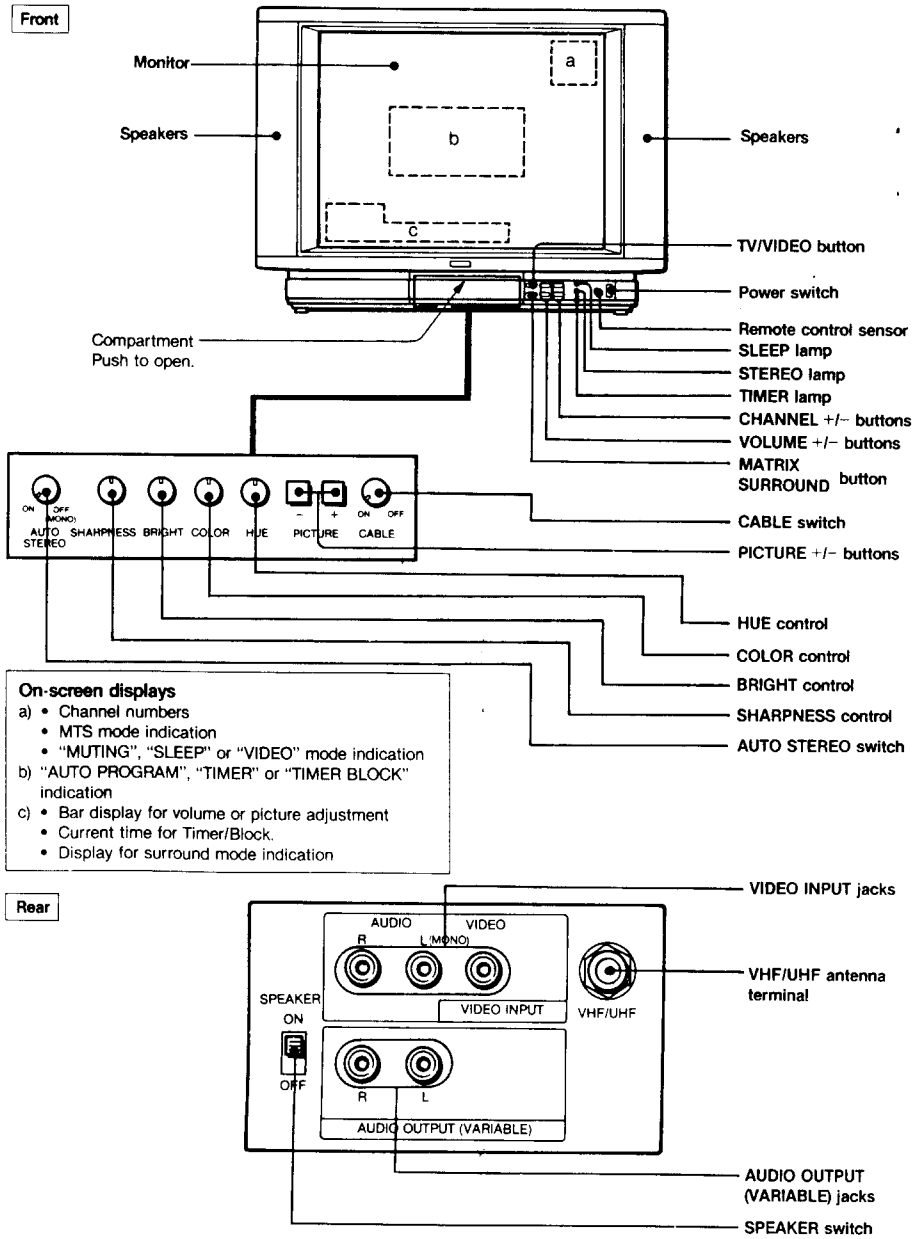

On-screen displays

a) • Channel numbers
• MTS mode indication
• "MUTING", "SLEEP" or "VIDEO" mode indication

b) "AUTO PROGRAM", "TIMER" or "TIMER BLOCK" indication

c) • Bar display for volume or picture adjustment
• Current time for Timer/Block.
• Display for surround mode indication

1-2. CONNECTING OTHER OPTIONAL EQUIPMENT

Connecting a VCR

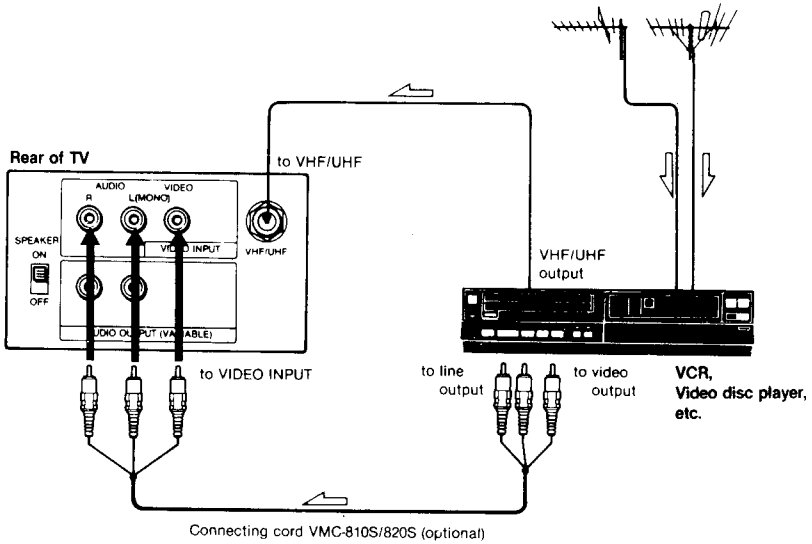

With this connection, you will be able to...
—View the playback of video tapes
—Record TV programs
—Record a TV program while viewing another

To watch the VCR picture

1 Turn on the TV.
2 Press the TV/VIDEO button on the TV so that the "VIDEO" indication appears on the screen.
3 Set the VCR in playback mode.

To return to the TV mode

Press the TV/VIDEO button on the TV until a channel number appears on the screen.

- If you connect a monaural VCR, connect the audio output of the VCR to the L jack of the TV. The monaural sound is heard from both speakers.
- For operation, refer to the instruction manual furnished with the VCR.
- Keep the VCR away from the TV, if the picture or sound is affected.
- When no signal is fed through the VIDEO INPUT jacks even though the TV is in the video mode, "VIDEO" indication will appear on the screen.

1-3. PREPARING REMOTE COMMANDER

Connecting an Audio System

—To monitor the TV or connected VCR sound through an audio system

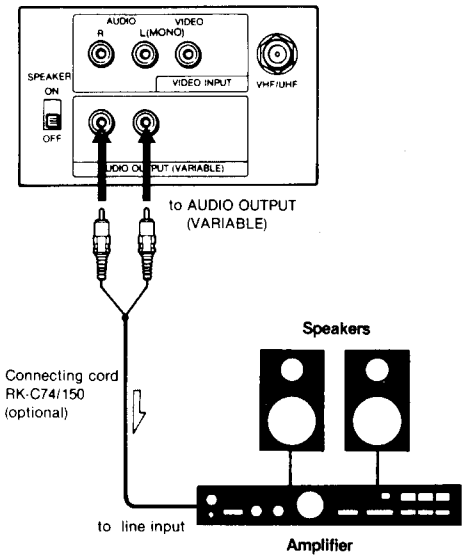

To adjust the sound level
Keep the amplifier volume, bass and treble controls to certain positions (usually at the medium position) and adjust the level with the VOLUME buttons on the TV or the VOL buttons on the Commander.

When an audio system is connected to AUDIO OUTPUT, be sure to set the SPEAKER switch on the TV to OFF.
The sound from the TV's speakers will be cut off.

Battery installation

1 Slide the cover all the way so that the battery compartment appears, then take it off.
2 Place batteries in the Commander with correct polarity as illustrated inside the case.
3 Replace the cover.

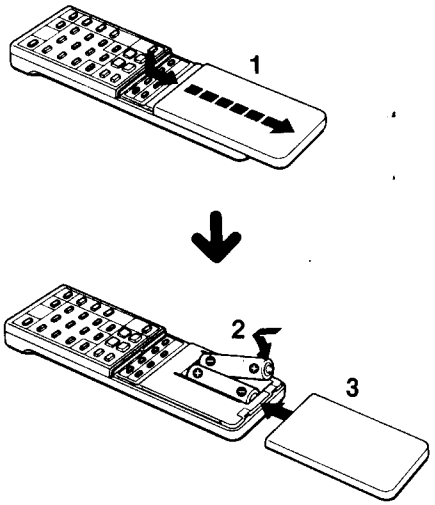

- **In normal operation, batteries will last up to half a year.** If the unit does not operate properly, the batteries might be exhausted. Replace them with new ones.
- To avoid damage from possible battery leakage, remove the batteries when the Commander will not be used for a long time.
- If a Remote Commander that is not recommended is used to operate this TV, or if the supplied Remote Commander is used to operate another TV, the TV may not operate properly.

1-4. PRESETTING TV CHANNELS

Use the Remote Commander.

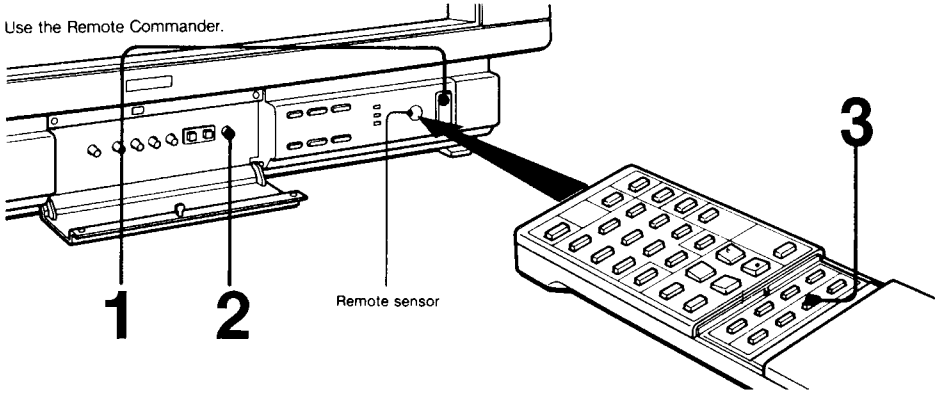

1 **Turn the TV on.**

2 **Set CABLE to the correct position.**

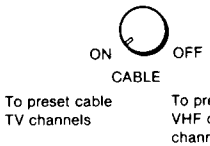

3 **Press AUTO PROG.**

"AUTO PROGRAM" is displayed on the screen and receivable channels (other than the channels already preset) will be preset in numerical sequence. The channels previously preset remain in the unit's memory.
When no more channels can be found, the programming stops and the lowest numbered channel is displayed.

Receivable channels of this TV are:
VHF: 2-13
UHF: 14-69
Cable: 1-125

To check preset channels
Press CHANNEL +/–.

To add the channels that could not be preset with this automatic programming because their signal strength was too weak, or **to erase unnecessary channels,** follow the steps in "To preset only the desired channels" on the next page.

To preset only the desired channels
—manual programming

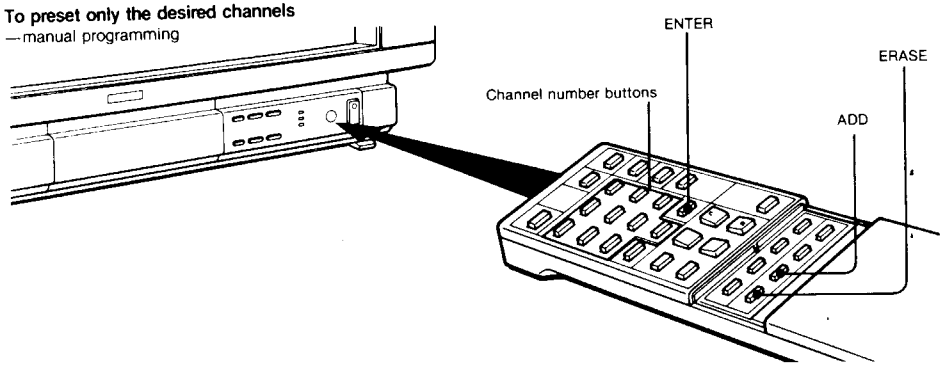

1 **Press the channel number button(s) and then ENTER to select the channel to be added.**

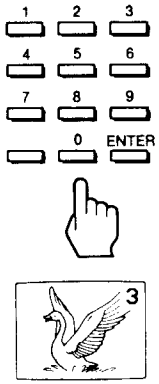

2 **Press ADD.**

A "+" appears for a moment to the left of the on-screen channel number display. This channel has now been added to the channel scan memory.

To add other channels
Repeat steps 1 to 2.

To erase channels
1 **Select the channel to be erased.**
2 **Press ERASE.**
A "–" appears for a moment to the left of the on-screen channel number display. This channel has now been erased from the channel scan memory.

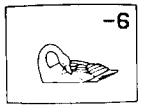

Repeat steps 1 and 2 for other channels to be erased.

When a VHF or UHF channel is erased
The cable TV channel with the same number is also erased and vice versa.

Cable TV channel chart*
Cable TV systems use letters or numbers to designate channels. To tune in a channel, refer to the chart below.

Number on this TV	1	5	6	14	15	16	17	18	19	20	21	22	23	24	25	26	27	28	29	30
Corresponding CATV channel	A–8	A–7	A–6	A	B	C	D	E	F	G	H	I	J	K	L	M	N	O	P	Q

31	32	33	34	35	36	37	38	39	.....	93	94	95	96	97	98	99	100	101	102	.....	123	124	125
R	S	T	U	V	W	W+1	W+2	W+3	.....	W+57	W+58	A–5	A–4	A–3	A–2	A–1	W+59	W+60	W+61	.....	W+82	W+83	W+84

Check with your local cable TV company for more complete information on the available channels.

Pay cable TV systems use scrambled or encoded signals and require special converters (decorders) in addition to the normal cable connection.

* The designation of the cable TV channels conforms to the EIA/NCTA recommendation.

1-5. WATCHING TV PROGRAMS

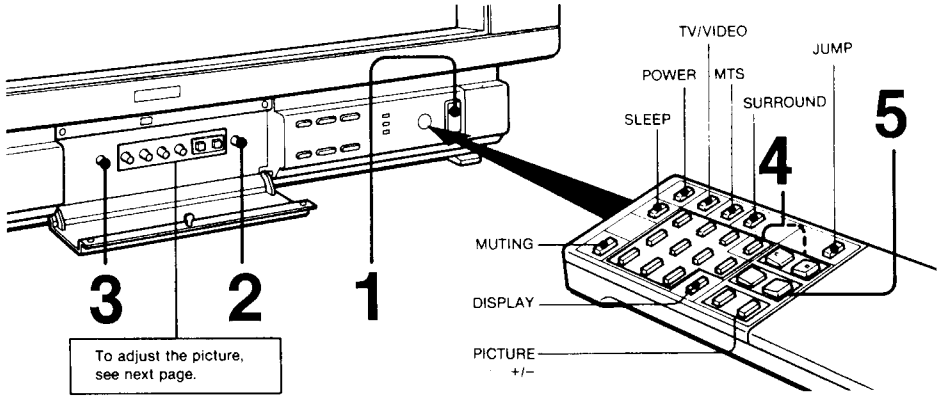

1 **Press POWER to turn the TV on.**

2 **Set CABLE to the appropriate position.**

CABLE

To view cable TV channels

To view VHF or UHF channels

3 **Set AUTO STEREO to ON.**

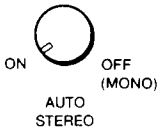

When receiving a Multichannel TV Sound program
Each time MTS is pressed, MAIN, SAP (Second Audio Program), or both are selected in sequence. The corresponding indication will appear on the screen for a while.

If noise makes it hard to receive a very weak TV stereo program
Set AUTO STEREO on the TV to OFF so that the STEREO lamp goes off.
The stereo effect will be cancelled, but reception will be stabilized and the noise will be reduced.

To mute the sound
Press MUTING. The "MUTING" indication will appear on the screen. To restore the sound, press MUTING again or VOL +/–.

To keep the channel display on the screen
Press DISPLAY.

To adjust the picture

SHARPNESS		BRIGHT		COLOR		HUE		PICTURE −	PICTURE +
for less sharpness	for more sharpness	for less brightness	for more brightness	for less color intensity	for more color intensity	skin tones become purplish	skin tones become greenish	Press to decrease picture contrast with soft color	Press to increase picture with vivid contrast color

4 Select a channel in one of the following two ways:

To scan the preset channels in numerical sequence, press CH +/−.

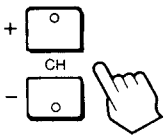

To select a channel directly, press the channel number button(s) and then ENTER. For example, to select channel 10, press 1, 0 and ENTER.

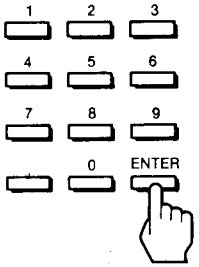

5 Press VOL + or − to adjust the volume.

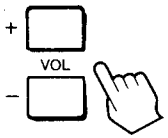

To switch quickly between 2 channels
Press JUMP. Each time JUMP is pressed, the channel which appeared on the screen directly before is recalled. This button enables you to keep track of two programs alternately.

To have the TV turn off automatically after about 1 hour
Press SLEEP. The "SLEEP" indication will appear on the screen for a few seconds and the SLEEP lamp on the TV will remain lit until the TV is turned off.

To cancel the SLEEP timer, press SLEEP again so that the SLEEP lamp goes out, or turn off the TV.

To turn off the system
Press POWER again.

To enjoy MATRIX surround effect
To enjoy sound reproduction with the atmosphere of a movie theater or a concert hall, press the SURROUND button.

Press the button again to deactivate MATRIX surround effect.

This MATRIX surround effect works only at stereo broadcasting.

Surround	On-screen indication
Turned ON	⇨
Turned OFF	⇨

1-6. TIMER/BLOCK

Available functions

Internal clock	Once the internal clock is set, the current time will appear on the screen. It is necessary to set the clock correctly to activate the program start TIMER and channel BLOCK.
Program start TIMER	Makes a program of your choice appear on the screen automatically at the desired time.
Channel BLOCK	Blocks a channel from appearing on the screen for 12 hours. Use channel BLOCK to prevent children from watching undesirable programs.

The buttons used for the above functions are located on the Remote Commander.

To set the internal clock, program start TIMER and channel BLOCK, you must summon the corresponding "pages": "clock page," "TIMER page" and "BLOCK page."

To change the "pages," press TIMER/BLOCK. T/B stands for the TIMER/BLOCK button.

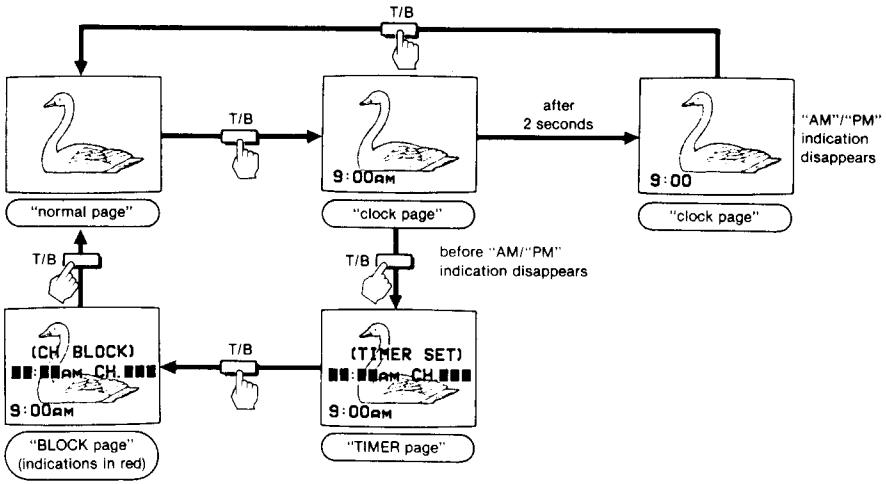

- All settings will be erased from the unit's memory if the unit is unplugged, or if a power failure occurs.
- The TIMER and BLOCK will operate only if the clock is set correctly.
- If the TIMER and BLOCK are set for overlapping times on the same channel, the blocked channel will appear on the screen at the time set on the TIMER.

How to Set Internal Clock

Example: To set the clock to 8:05 PM

1 Press TIMER/BLOCK once to change from "normal page" to "clock page."

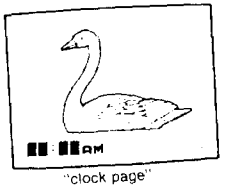

"clock page"

2 Press 0, 8, 0, 5, AM/PM (0 necessary).

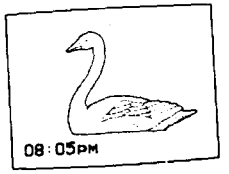

3 If you have performed the operation correctly, press ENTER.
The numbers will "wink" to indicate that the clock has been set. (The 0 in front will disappear.)

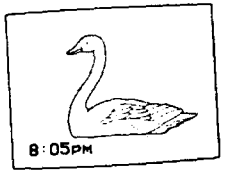

If you have made a mistake, press CLEAR and return to step 2.

The "AM/PM" indication will disappear after 2 seconds.

To summon "TIMER page," press TIMER/BLOCK before the "AM"/"PM" indication disappears.
To return to "normal page," press TIMER/BLOCK after the "AM"/"PM" indication has disappeared.

To reset the clock, summon "clock page" and press CLEAR before the "AM"/"PM" indication disappears. Then follow the steps above from step 2.

12:00 AM stands for midnight.
12:00 PM stands for noon.

How to Set the Channel BLOCK

Make sure that the clock has been set correctly before setting the channel BLOCK.

Example: To set the BLOCK for a program which begins at 9:30 AM on channel 8

1 Press TIMER/BLOCK three times to change from "normal page" to "BLOCK page."

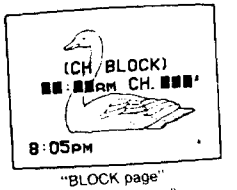

"BLOCK page"
(indications in red)

2 Press 0, 9, 3, 0, ENTER (0 necessary).
Numbers will "wink" to indicate that the time has been set.
Press 8, ENTER (0 not necessary).
Numbers will "wink" to indicate that the channel has been set.

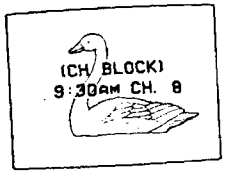

The BLOCK has now been set.
If you have made a mistake, press CLEAR and return to step 2.

At the preset time, the picture of the selected channel will be blocked from view and the sound will be muted. A red "BLOCKED" indication will appear on the screen while the channel is blocked.
Normal reception will be resumed after 12 hours.

To return to normal reception while the channel is blocked, recall "BLOCK page" and press CLEAR.

The BLOCK setting blocks a specified channel for the same 12-hour period everyday.

To clear BLOCK setting, summon "BLOCK page" and press CLEAR.
To reset, clear the setting and follow the steps above from step 2.

How to Set the Program Start TIMER

Make sure that the clock has been set correctly before setting the program start TIMER.

Example: To set the TIMER for a program which begins at 10:30 PM on channel 12

1 Press TIMER/BLOCK once to change from "normal page" to "clock page."

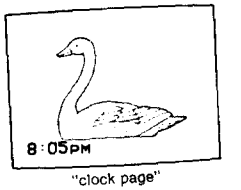

"clock page"

2 Press TIMER/BLOCK before the "AM"/"PM" indication disappears and summon "TIMER page."

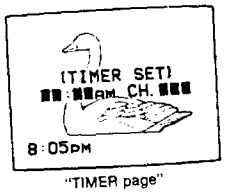

"TIMER page"

3 Press 1, 0, 3, 0, AM/PM, ENTER.
Numbers will "wink" to indicate that the time has been set.

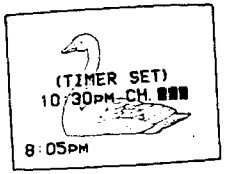

4 Press 1, 2, ENTER (0 not necessary).
Numbers will "wink" to indicate that the channel has been set.

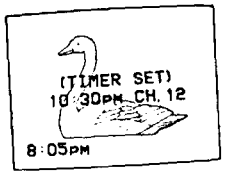

The TIMER lamp will light up to indicate that the TIMER has been set.
If you have made a mistake, press CLEAR and return to step 3.

At the preset time, the selected channel will appear on the screen and the TIMER lamp will go out. The TIMER will operate whether you are watching a TV program or a VCR playback, or even if you have turned off the TV.

If no button is pressed within 2 hours after the preset time, an "OFF" indication will appear on the screen for 1 minute. If a button is still not touched during the 1 minute, the TV will turn off automatically as a safety precaution.

The TIMER operates only once, but the time and the channel will remain in the unit's memory.
If you want to preset the same channel at the same time for a future date, press TIMER OFF/REPEAT. The TIMER lamp will light up to indicate that the TIMER has been reactivated.

If you want to deactivate the TIMER, press TIMER OFF/REPEAT again so that the TIMER lamp goes out.
It is not necessary to summon "TIMER page" to use the TIMER OFF/REPEAT button. Furthermore, this button is effective even if the TV has been turned off.

To clear the TIMER setting, summon "TIMER page" and press CLEAR.
To reset, clear the setting and follow the steps from step 3.